Exp no: 8 Transient analysis of
Date: 4.3.26 Series RLC circuits.

Aim:

To determine transient response of a series RLC series circuit using Multisim Simulator.

Apparatus Required:

S.no	Component	Specification	Qty.
1.	CRO	10 MHz	1
2.	DCB, DIB	-	1
3.	Resistors	10KΩ	-
4.	Bread Board	-	1
5.	Connecting wires	-	-
6.	PC with Multisim Simulator.	-	-

Circuit diagram:

Choose : $R = 10K\Omega$, $L = 10mH$, $C = 0.1\mu F$
(values of R, L, C can be changed)

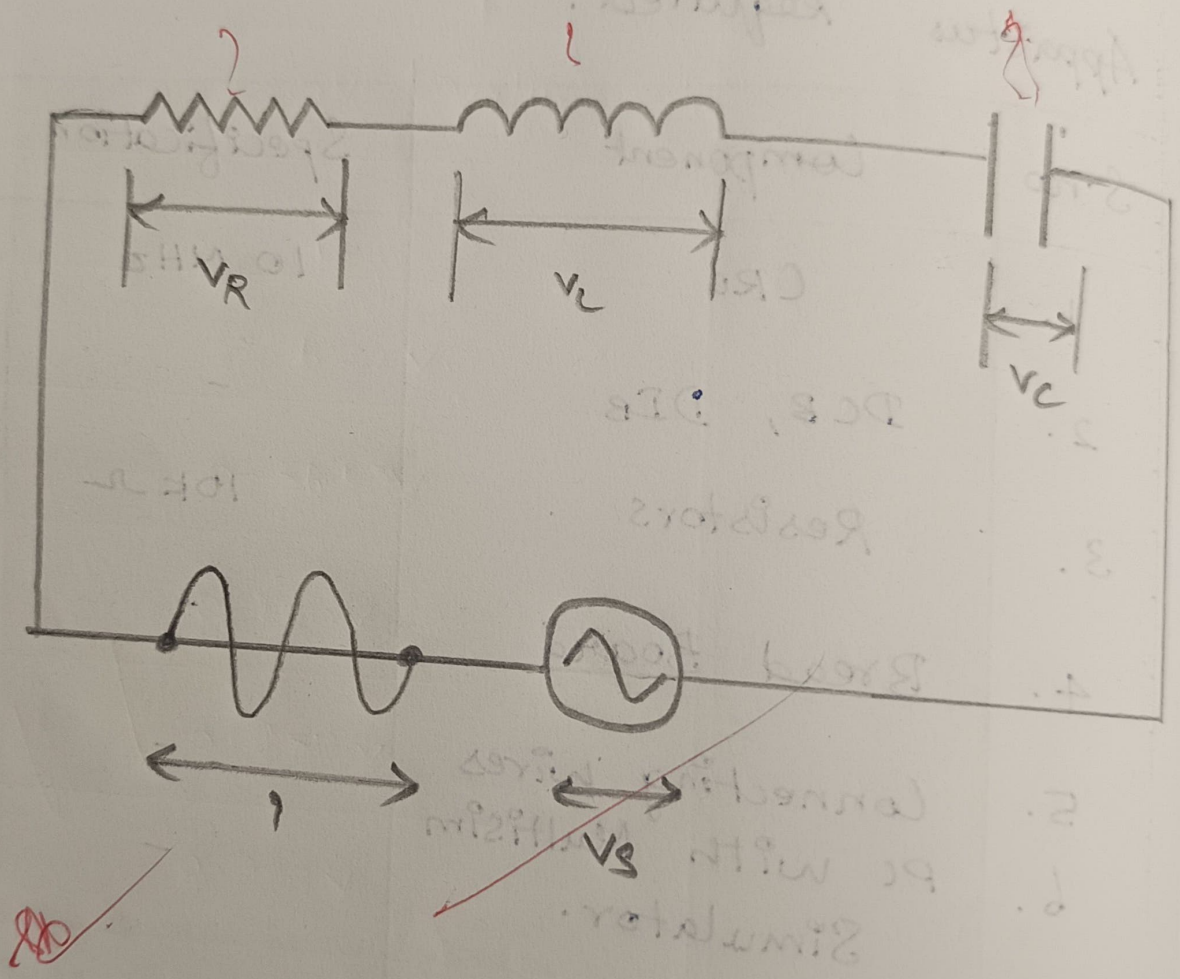

Procedure:

1. Make connection as per the circuit diagram.
2. Calculate the values of $V_C(t)$, $V_R(t)$, $V_L(t)$, and write in table.

Compare the calculated values and measure values of voltage in both the case.

Tabulation :-

Voltage across capacitor :

V_{in} Amplitude : 5V

V_{in} Frequency : 1kHz

Time constant $\tau = RC = 1\,ms$

Time(t)	$(V_c)(t)$ = Charging cycle (volts) observed value	$V_c(t)$ - Discharging cycle (volts) observed value
t=0	0	V
$t=\tau$	0.632V	0.368V
$t=2\tau$	0.865V	0.135V
$t=3\tau$	0.950V	0.050V
$t=4\tau$	0.982V	0.018V
$t=5\tau$	0.993V	0.007V

verified

Calculation:

Given : $R = 10k\Omega$, $C = 0.1\mu F$, $L = 10mH$

Time constant

RC time constant

$$\tau = R \times C$$

$$= 1000 \times 0.1 \times 10^{-6} = 0.001s$$

$$= 1ms$$

RL time constant

$$\tau = \frac{L}{R} = \frac{0.01}{10000} = 1ms$$

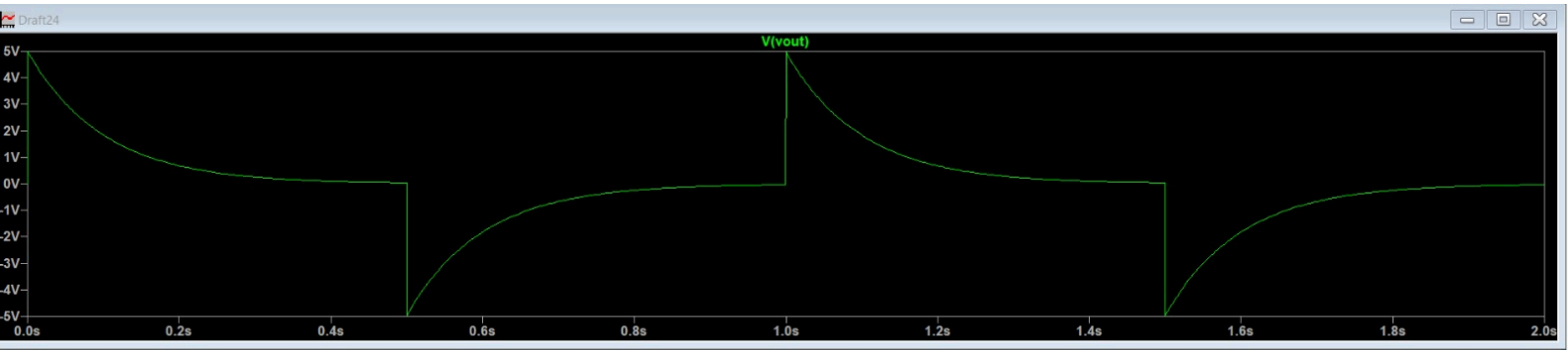
Draft24
V(vout)
5V
4V
3V
2V
1V
0V
-1V
-2V
-3V
-4V
-5V
0.0s
0.2s
0.4s
0.6s
0.8s
1.0s
1.2s
1.4s
1.6s
1.8s
2.0s

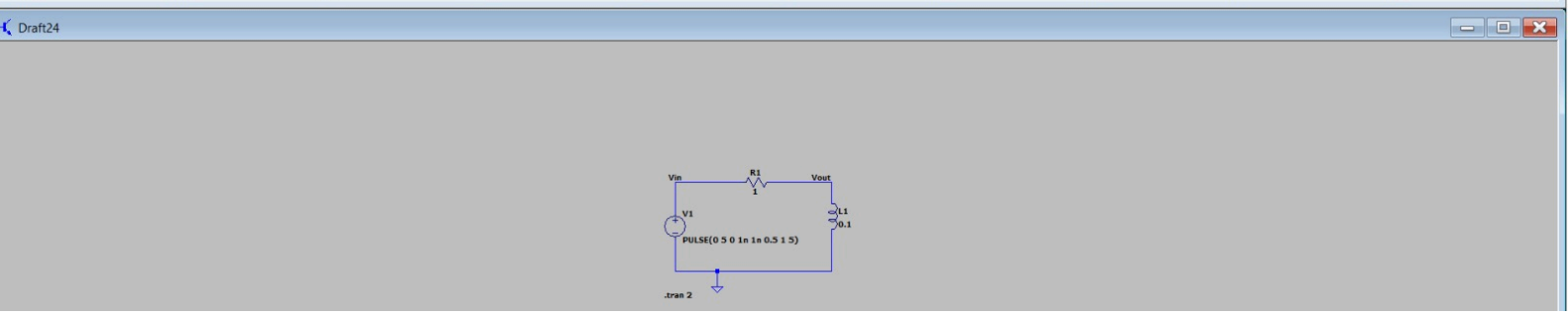
Draft24
Vin
R1
1
Vout
V1
L1
0.1
PULSE(0 5 0 1n 1n 0.5 1 5)
.tran 2

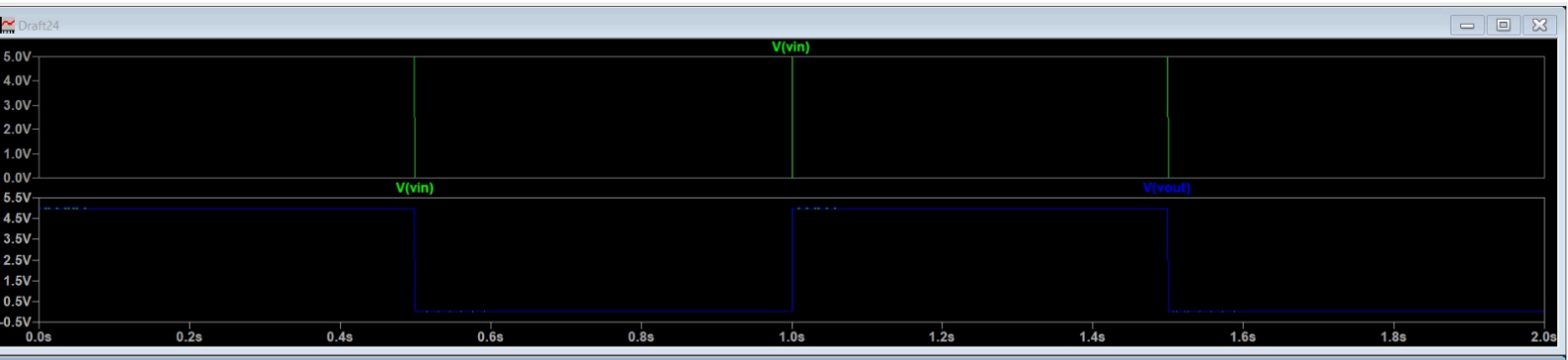
Draft24
V(vin)
5.0V
4.0V
3.0V
2.0V
1.0V
0.0V
V(vin)
V(vout)
5.5V
4.5V
3.5V
2.5V
1.5V
0.5V
-0.5V
0.0s
0.2s
0.4s
0.6s
0.8s
1.0s
1.2s
1.4s
1.6s
1.8s
2.0s

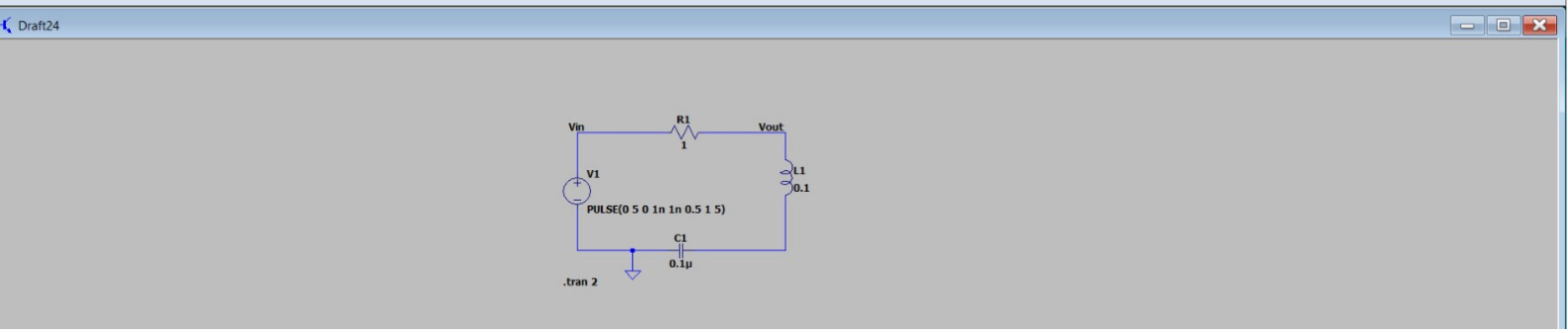
Draft24
Vin
R1
1
Vout
V1
L1
0.1
PULSE(0 5 0 1n 1n 0.5 1 5)
C1
0.1µ
.tran 2

Mark Split-up.

Sl.no	Description	Mark Allotted	Mark Obtained
1.	Experimental Setup / Connection.	20 Marks	20
2.	Observation / Reading	20 Marks	20
3.	Calculation / Result	20 Marks	20
4.	Viva	20 Marks	20
5.	Record.	20 Marks	20
		Total	100

Votage across Inductor:

V_{in} Amplitude: 5V

V_{in} Frequency: 1KHz

Time constant $\tau = L/R = 1MS$

Time (t)	$V_L(t)$ = Voltage across Inductor	$V_R(t)$ = Voltage across Resistor
	Observed Value	Observed Value
$t=0$	5V	0V
$t=\tau$	3.0V	2V
$t=2\tau$	1.8V	3V
$t=3\tau$	1.0V	4V
$t=4\tau$	0.5V	4.5V
$t=5\tau$	0V	5V

Not verified

$V_L(t) = V_{in} e^{-t/\tau} \rightarrow t=0 \rightarrow V_L = 10e^{-0}$.

Voltage across capacitor:

$$V_c(t) = V(1-e^{-t/x})$$

$$t = \tau$$

$$V_c = 1(1-e^{-1}) = 1(1-0.368) = 0.632V$$

$$t = 2\tau$$

$$V_c = 1(1-e^{-2}) = 1(1-0.135) = 0.865V$$

10/10
12/12

Result:-

thus the transient analysis of series RLC circuit is done practically using Multisim Simulator.